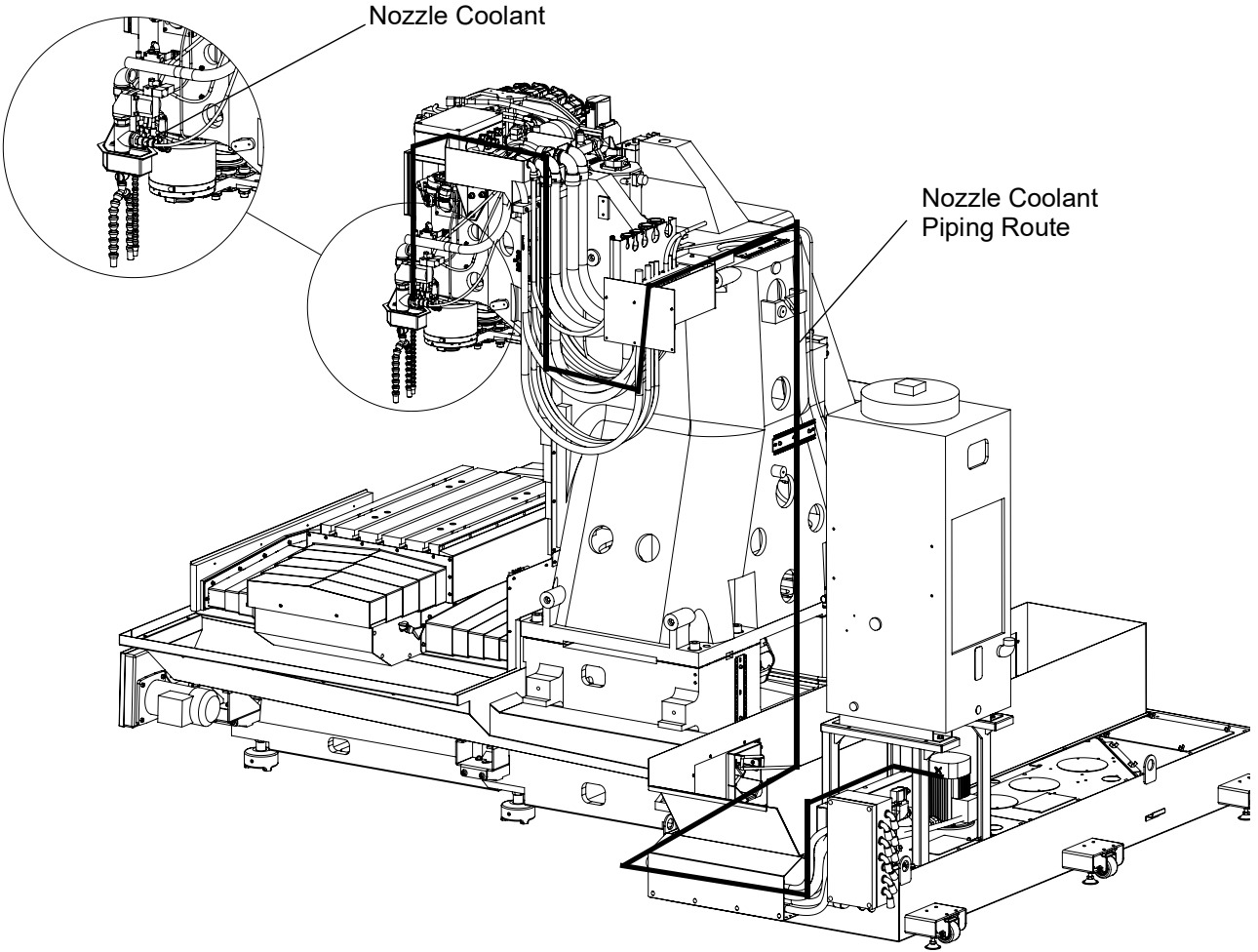
Nozzle Coolant
Nozzle Coolant
Piping Route